520 E. Franklin Rd
Meridian, ID 83642
Toll Free: 877-793-6636 US Only
Phone: 208-609-6636
Email: admin@covington-engineering.com

PORTABLE COMBO SLAB & TRIM SAW

- ✓ Light enough to be easily moved.
- ✓ Easily converts from slab to trim saw with drop-in trim table.
- ✓ Sawmill type carriage glides on steel ways.
- ✓ Rigid Grip Vise: Steel jaw tongue contacts full length of vise, holding jaw square so it can't bind.
- ✓ 4" crossfeed adjusts 1/16" per turn for uniform slabbing.
- ✓ Weight feed action for slabbing utilizes scales, cord and weight fastened to vise table.

OPTIONS: Deluxe Power Feed with over-running clutch and cut-off switch.

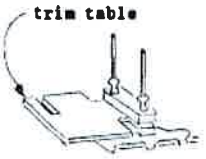

NO. 1 VISE

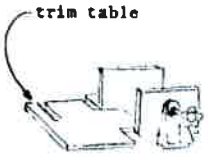

NO. 2 VISE

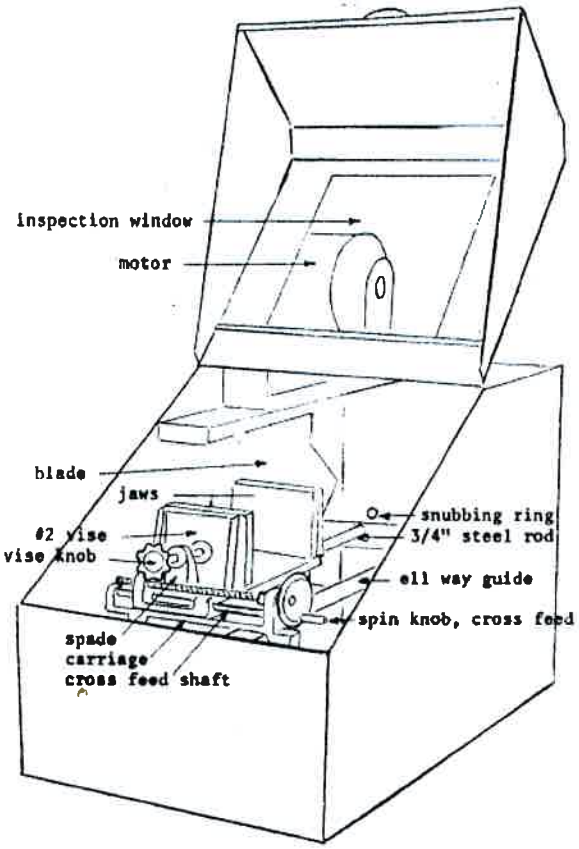

COMBINATION SLAB AND TRIM SAW - USING WEIGHT FEED SYSTEM

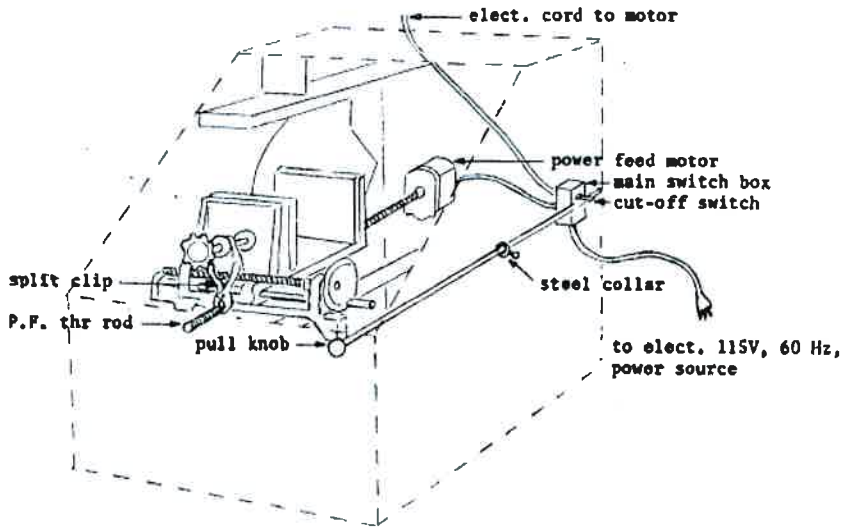

COMBINATION SLAB AND TRIM SAW - USING POWER FEED SYSTEM